MAXITU

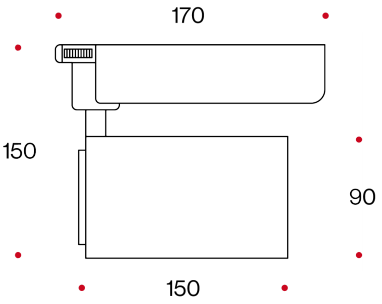

1,2 KG

IP20 | FLICKER FREE | SELV | 30.000 | BREAD | MEAT

C.R.I. > 95

POWER SUPPLY
220/240V-50/60Hz

Track-mounted adjustable projector with multiple ignition adapter and LED COB included. Body in painted aluminium. Reflector with 99,9% pure aluminium bright finishing.
Complete with driver box in painted die-cast aluminium.
Adjustable on the horizontal plane 350° and on the vertical plane 90°.

Track-mounted adjustable projector with multiple ignition adapter and LED COB included. Body in painted aluminium. Reflector with 99,9% pure aluminium bright finishing.
Complete with driver box in painted die-cast aluminium.
Adjustable on the horizontal plane 350° and on the vertical plane 90°.

ACCESSORI / ACCESSORIES

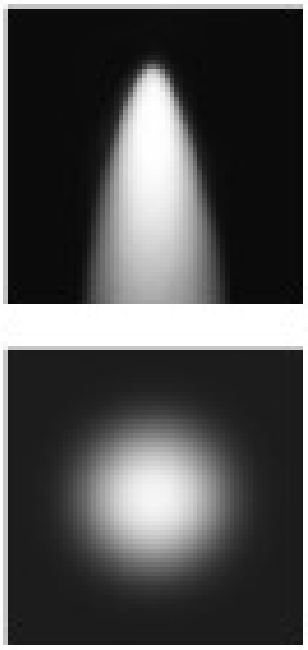

Refl. Beam SPOT

Refl. Beam Medium

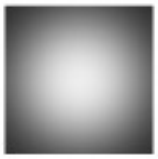

Refl. Beam Large

CODE			LUMEN NOM			
	LED	W	3000°K	4000°K	HOLE DIMENSIONI	DIMENSIONS A-B mm
57325R ■•▲	COB	25	3770	3900	150X150	150X150
57340R ■•▲	COB	40	5420	5600	150X150	150X150

■ COLOR CODE

- **32** - frosted white
- **33** - frosted black

• LED COLOR CODE

- **3000°K**- 85
- **4000°K**- 85

▲ REFLECTOR CODE

- **15°** - REFLECTOR BEAM
- **38°** - REFLECTOR BEAM
- **60°** - REFLECTOR BEAM